CRBD 11528 B

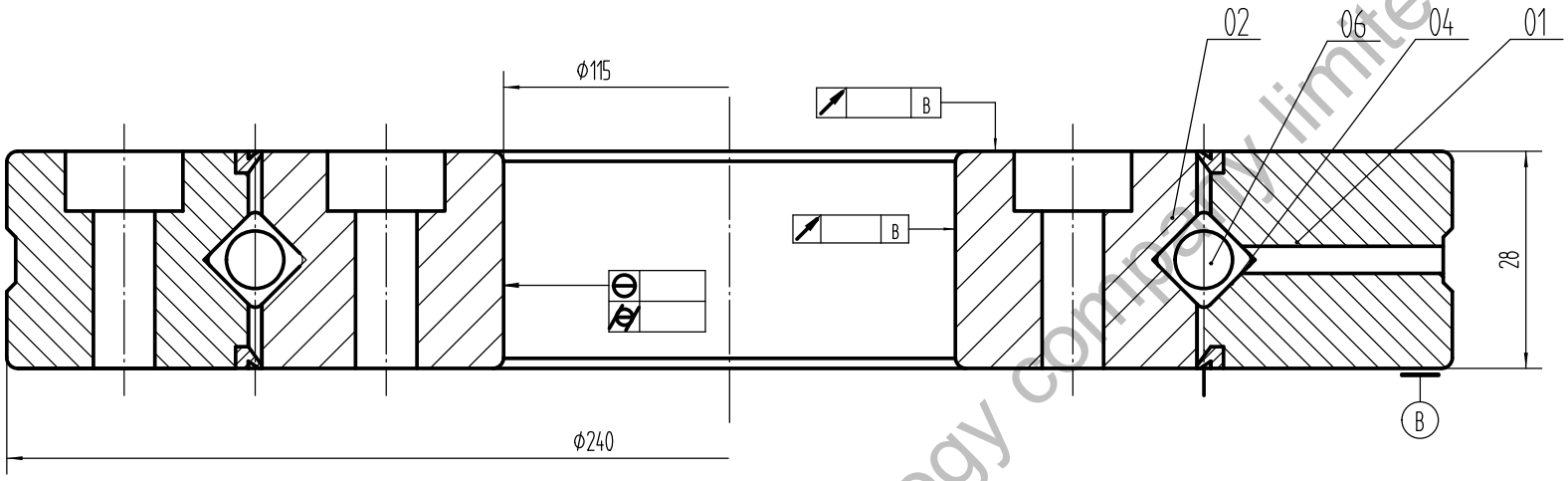

Remark:
1. Luoyang JCB Bearing Technology Co., Ltd is a technical Inc, specialize in designing and manufacturing cross roller bearing, we can design and manufactur all kinds of cross roller bearing according to
client's requirement.
2. This drawing is reference for user,if you need formal drawing,please
contact wth us sales@jcb-bearing.com, the official drawing will be submitted after order confirmation.

Contact information
Company Address : No.3 Lianmeng road, Luoyang, Henan,China.
Postal code : 471003
Phone : 86-379-68611678 Fax : 86-379-68611679
E-mail: sales@jcb-bearing.com
Reserved E-mail: sales@cross-roller-bearing.com
Website: www.jcb-bearing.com
www.cross-roller-bearing.com

roller cross arrangement

Part No.	Name	qty	Material	weight (kg)
06	Spacer			
04	Roller		steel GCr15-GB/T18254	
02	Inner ring	1	steel GCr15-GB/T18254	
01	outer semi ring	2	steel GCr15-GB/T18254	

CROSS ROLLER BEARING

CRBD 11528 B

Weight (kg)

Total 4 page | First page

Luoyang JCB Bearing Technology Co, Ltd

Luoyang JCB bearing technology company limited